Specifications for: M8-1.25 DIN 6331, Metric, Hex High Nuts with Collar, Length 1.5 X Diameter, A4 Stainless Steel

Notes:

- Category: Hex High Nuts with Collar
- Form and Design: Length 1.5 X Diameter
- System of Measurement: Metric
- Drive Style: External Hex Drive
- Thread Length: Full Thread
- Thread Direction: Right-Hand Thread
- Material: Stainless Steel
- Material Grade: A4 Stainless Steel
- Coating: Uncoated
- Standards and Specifications: DIN 6331

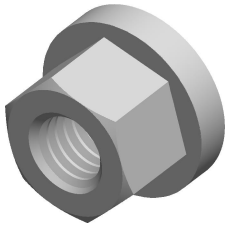

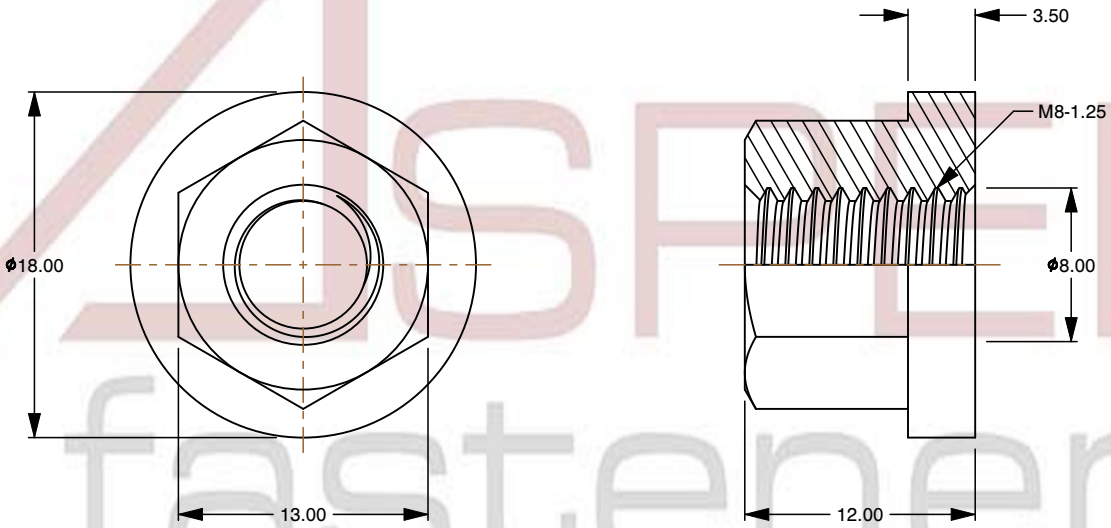

ASPEN fasteners www.aspenfasteners.com	This file and any associated information and specifications are provided for reference and evaluation purposes only and is subject to change without notice. Aspen Fasteners Inc. makes no representations, warranties, or guarantees as to the appropriateness, accuracy, completeness, or suitability for any purpose of the file, information or specifications. You are solely responsible for the use of the file, information, or specifications.	This document is the property of Aspen Fasteners Inc. and the information it contains may not be reproduced, disclosed, or shared with any third party without the expressed written permission of Aspen Fasteners Inc.	PRODUCT NAME M8-1.25 DIN 6331, Metric, Hex High Nuts with Collar, Length 1.5 X Diameter, A4 Stainless Steel	UNIT MILLIMETERS ISSUED 2025-01-26
		SCALE 2.540	PART NUMBER: ME600-8125X12X18X13	SHEET 1 of 1