Specifications for: 1/4"-20 X 3/4" SEMS External Tooth Washer Machine Screws, Pan Phillips Drive, Steel, Black Oxide

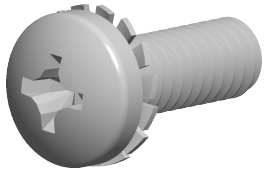

Notes:

- Category: Machine Screws
- System of Measurement: Inch
- Form and Design: SEMS Screws Pre-Assembled with a Captive Lock Washer
- Head Style: Pan Head
- Head Style Detail: Free-Spinning External Tooth Lock Washer
- Drive Style: Cruciform Recess Drive
- Drive Detail: Phillips Type H
- Thread Length: Full Thread
- Thread Direction: Right-Hand Thread
- Material: Steel
- Coating: Oxidized
- Coating Color: Black
- Origin: Origin Undefined
- Standards and Specifications: ASME B18.13a and SAE J82

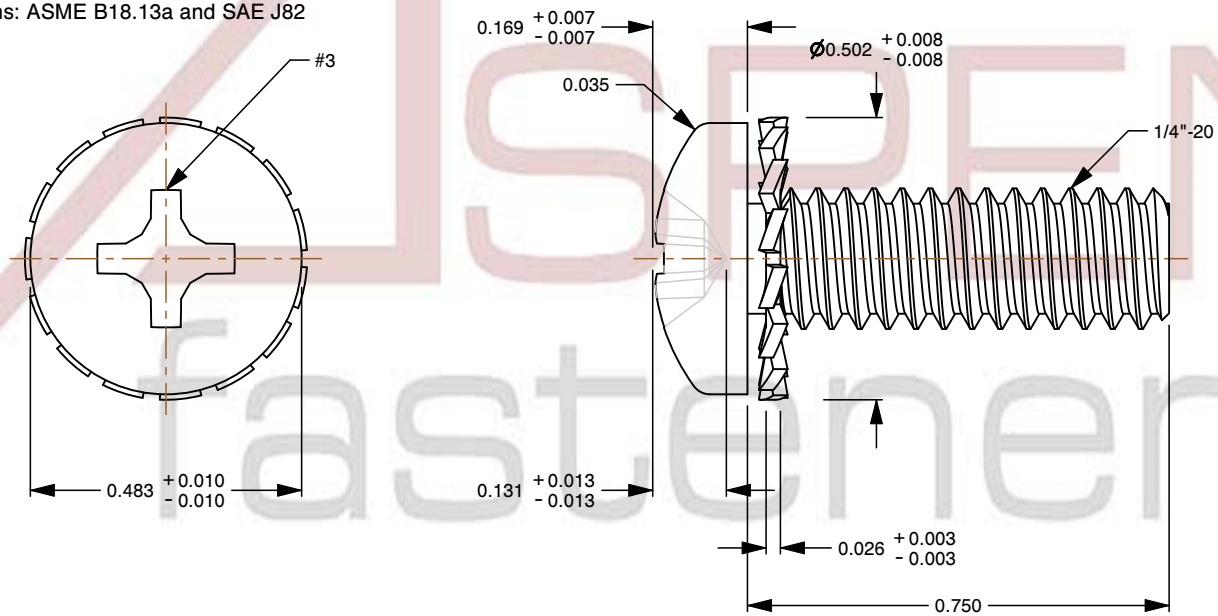

ASPEN fasteners www.aspenfasteners.com	This file and any associated information and specifications are provided for reference and evaluation purposes only and is subject to change without notice. Aspen Fasteners Inc. makes no representations, warranties, or guarantees as to the appropriateness, accuracy, completeness, or suitability for any purpose of the file, information or specifications. You are solely responsible for the use of the file, information, or specifications.	This document is the property of Aspen Fasteners Inc. and the information it contains may not be reproduced, disclosed, or shared with any third party without the expressed written permission of Aspen Fasteners Inc.	PRODUCT NAME 1/4"-20 X 3/4" SEMS External Tooth Washer Machine Screws, Pan Phillips Drive, Steel, Black Oxide	UNIT INCHES ISSUED 2026-06-03
		SCALE 2.928	PART NUMBER: SC222-1420X34	SHEET 1 of 1