Specifications for: 5/16"-18 X 2-1/2" Machine Screws, Oval Undercut Phillips Drive, 82 Degree Countersink, Full Thread, Stainless Steel

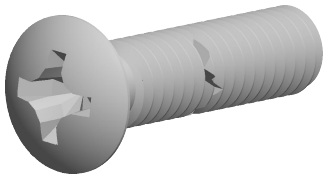

Notes:

- Category: Machine Screws
- System of Measurement: Inch
- Head Style: Oval Countersunk Undercut Head
- Head Style Detail: 82 Degree Countersink
- Drive Style: Cruciform Recess Drive
- Drive Detail: Phillips Type H
- Thread Length: Full Thread
- Thread Direction: Right-Hand Thread
- Material: Stainless Steel
- Material Grade: 18-8 Stainless Steel
- Coating: Uncoated
- Origin: Origin Undefined
- Standards and Specifications: ASME B18.6.3

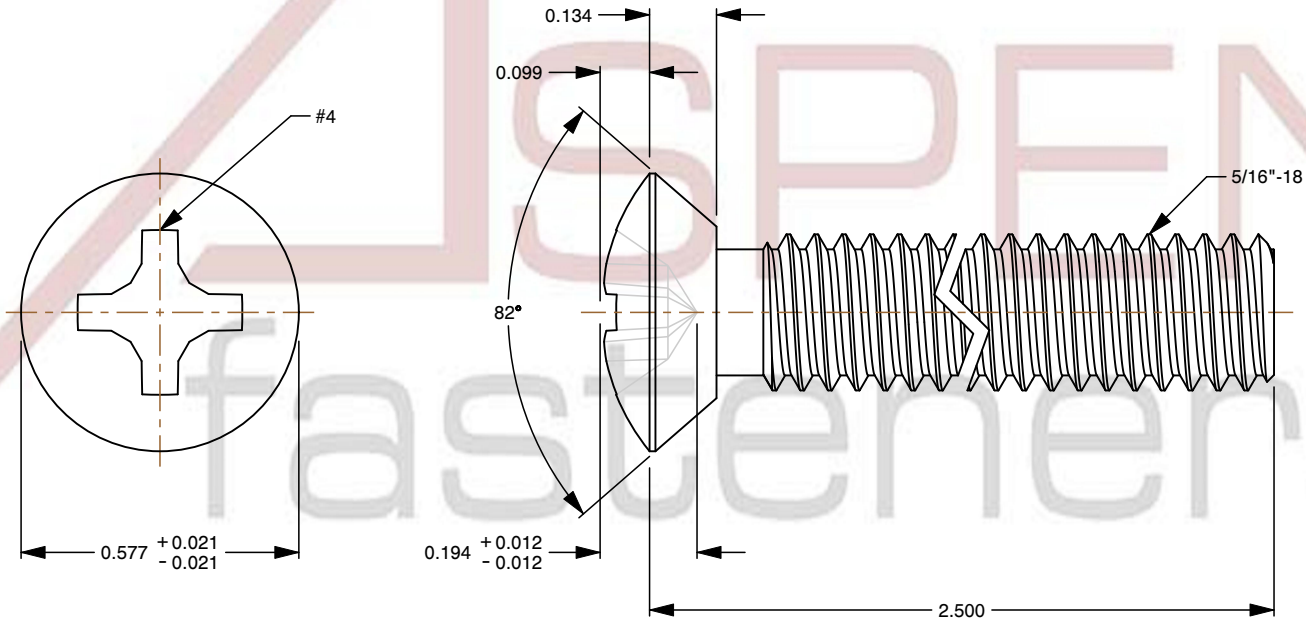

ASPEN fasteners www.aspenfasteners.com	This file and any associated information and specifications are provided for reference and evaluation purposes only and is subject to change without notice. Aspen Fasteners Inc. makes no representations, warranties, or guarantees as to the appropriateness, accuracy, completeness, or suitability for any purpose of the file, information or specifications. You are solely responsible for the use of the file, information, or specifications.	This document is the property of Aspen Fasteners Inc. and the information it contains may not be reproduced, disclosed, or shared with any third party without the expressed written permission of Aspen Fasteners Inc.	PRODUCT NAME 5/16"-18 X 2-1/2" Machine Screws, Oval Undercut Phillips Drive, 82 Degree Countersink, Full Thread, Stainless Steel	UNIT INCHES ISSUED 2026-06-03
		SCALE 2.602	PART NUMBER: ST102-51618X212	SHEET 1 of 1