Specifications for: 5/16"-18 X 3" Machine Screws, Round Phillips/Slot Combo Drive, Full Thread, Steel, Zinc Plated

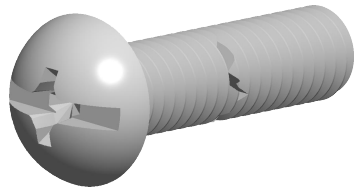

Notes:

- Category: Machine Screws
- System of Measurement: Inch
- Head Style: Round Head
- Drive Style: Cruciform/Slotted Recess Drive
- Drive Detail: Phillips Type H
- Thread Length: Full Thread
- Thread Direction: Right-Hand Thread
- Material: Steel
- Coating: Zinc Plated
- Coating Color: Clear
- Origin: Origin Undefined
- Standards and Specifications: ASME B18.6.3 and SAE J82

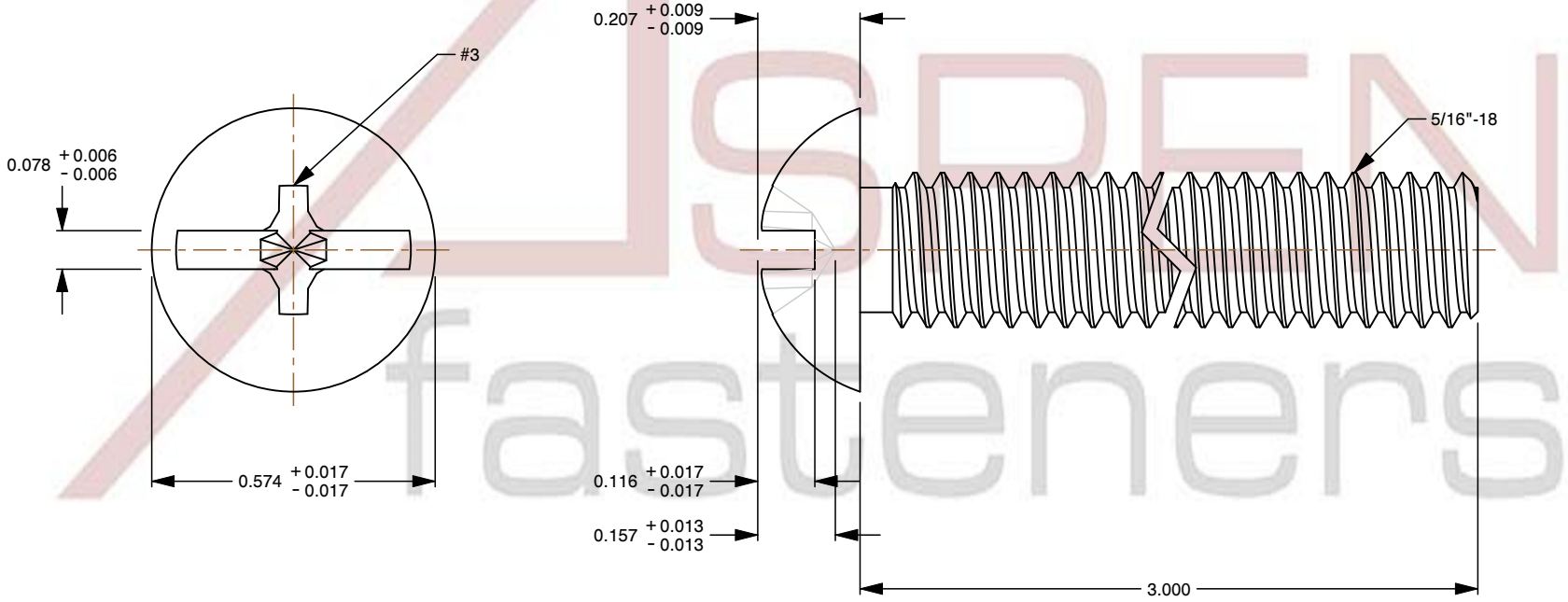

ASPEN fasteners
www.aspenfasteners.com

This file and any associated information and specifications are provided for reference and evaluation purposes only and is subject to change without notice. Aspen Fasteners Inc. makes no representations, warranties, or guarantees as to the appropriateness, accuracy, completeness, or suitability for any purpose of the file, information or specifications. You are solely responsible for the use of the file, information, or specifications.

This document is the property of Aspen Fasteners Inc. and the information it contains may not be reproduced, disclosed, or shared with any third party without the expressed written permission of Aspen Fasteners Inc.

SCALE 2.758

PRODUCT NAME
5/16"-18 X 3" Machine Screws, Round Phillips/Slot Combo Drive, Full Thread, Steel, Zinc Plated

PART NUMBER: SC166-51618X3

UNIT
INCHES

ISSUED
2026-06-03

SHEET 1 of 1