**Specifications for: M5-0.8 X 8mm DIN 551 / ISO 4766, Metric, Slotted Set Screws, Flat Point, A4 Stainless Steel**

Notes:

- Category: Set Screws
- System of Measurement: Metric
- Head Style: Headless
- Drive Style: Slotted Drive
- Thread Length: Full Thread
- Thread Direction: Right-Hand Thread
- Point: Flat Point
- Material: Stainless Steel
- Material Grade: A4 Stainless Steel
- Coating: Uncoated
- Origin: Origin Undefined
- Standards and Specifications: DIN 551 / ISO 4766

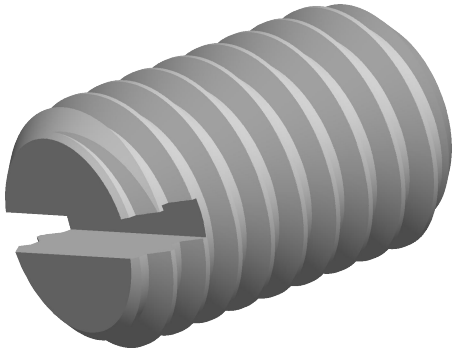

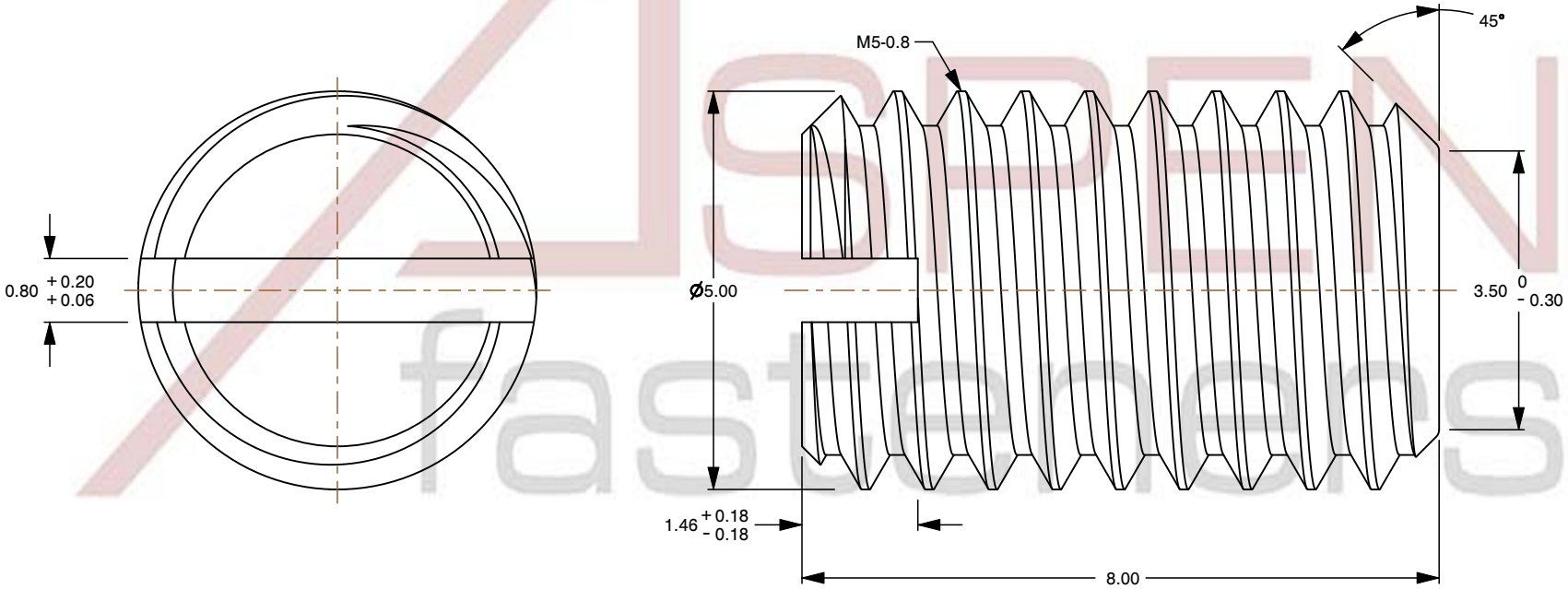


| | | | | |
|---|---|---|---|---|
| ASPEN fasteners<br>www.aspenfasteners.com | This file and any associated information and specifications are provided for reference and evaluation purposes only and is subject to change without notice. Aspen Fasteners Inc. makes no representations, warranties, or guarantees as to the appropriateness, accuracy, completeness, or suitability for any purpose of the file, information or specifications. You are solely responsible for the use of the file, information, or specifications. | This document is the property of Aspen Fasteners Inc. and the information it contains may not be reproduced, disclosed, or shared with any third party without the expressed written permission of Aspen Fasteners Inc. | PRODUCT NAME<br>M5-0.8 X 8mm DIN 551 / ISO 4766, Metric, Slotted Set Screws, Flat Point, A4 Stainless Steel | UNIT<br>MILLIMETERS<br>ISSUED<br>2025-01-0 |
| | | SCALE 11.430 | PART NUMBER: ME543-508X8 | SHEET 1 of 1 |