Specifications for: #10-32 X 3/8" Flat Head Socket Cap Screws, UNRF Fine Thread, Alloy Steel, Black Oxide, Holo-Krome

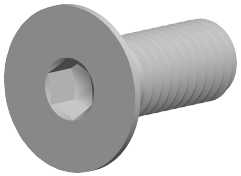

Notes:

- Category: Socket Head Cap Screws
- System of Measurement: Inch
- Head Style: Flat Countersunk Head
- Head Style Detail: 82 Degree Countersink
- Drive Style: Hex Socket Drive
- Pitch: UNRF Fine Thread
- Threading: Thread Class 3A
- Thread Direction: Right-Hand Thread
- Material: Steel
- Material Grade: Alloy Steel
- Material Processes: Heat Treated
- Coating: Oxidized
- Coating Color: Black
- Origin: Made in U.S.A.
- Standards and Specifications: ANSI B18.3 and ASTM F835

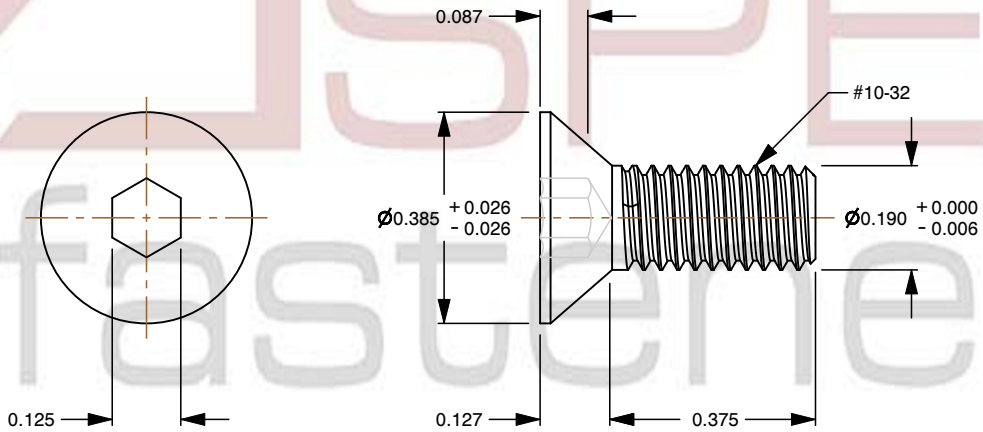

ASPEN fasteners www.aspenfasteners.com	This file and any associated information and specifications are provided for reference and evaluation purposes only and is subject to change without notice. Aspen Fasteners Inc. makes no representations, warranties, or guarantees as to the appropriateness, accuracy, completeness, or suitability for any purpose of the file, information or specifications. You are solely responsible for the use of the file, information, or specifications.	This document is the property of Aspen Fasteners Inc. and the information it contains may not be reproduced, disclosed, or shared with any third party without the expressed written permission of Aspen Fasteners Inc.	PRODUCT NAME #10-32 X 3/8" Flat Head Socket Cap Screws, UNRF Fine Thread, Alloy Steel, Black Oxide, Holo-Krome	UNIT INCHES ISSUED 2026-01-22
		SCALE 2.857	PART NUMBER: HK026-1032X38X18	SHEET 1 of 1