Specifications for: M5-0.8 X 40mm ISO 7380-1, Metric, Button Head Hex Socket Cap Screws, Full Thread, A2 Stainless Steel

Notes:

- Category: Socket Head Cap Screws
- System of Measurement: Metric
- Head Style: Button Head
- Drive Style: Hex Socket Drive
- Thread Length: Full Thread
- Thread Direction: Right-Hand Thread
- Material: Stainless Steel
- Material Grade: A2 Stainless Steel
- Coating: Uncoated
- Origin: Origin Undefined
- Standards and Specifications: ISO 7380-1

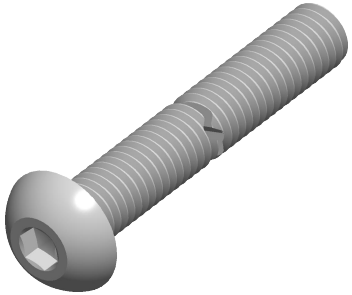

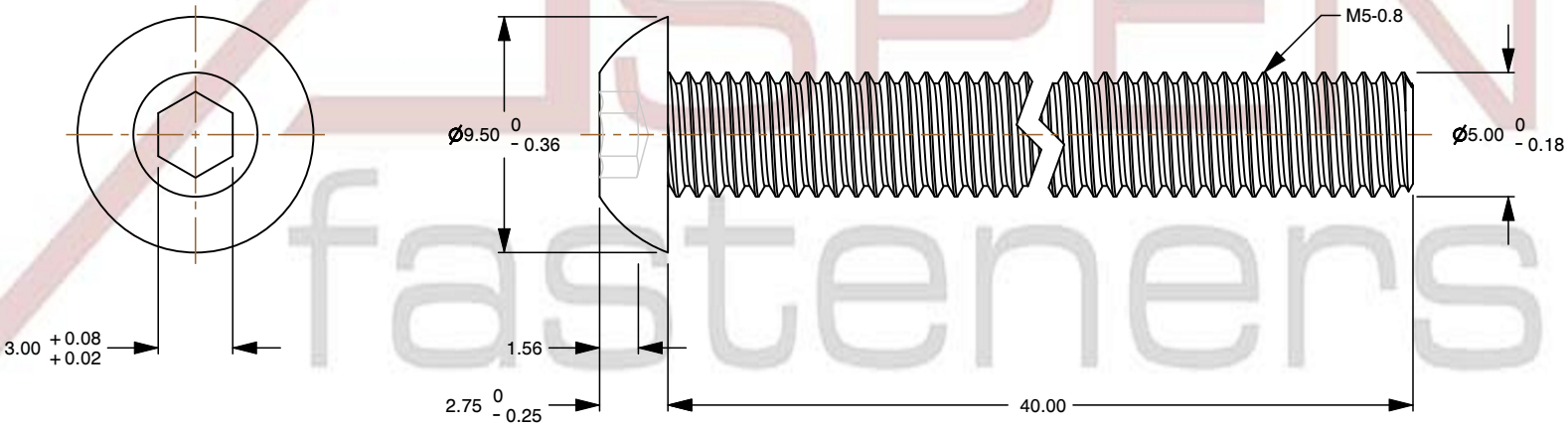

ASPEN fasteners www.aspenfasteners.com	This file and any associated information and specifications are provided for reference and evaluation purposes only and is subject to change without notice. Aspen Fasteners Inc. makes no representations, warranties, or guarantees as to the appropriateness, accuracy, completeness, or suitability for any purpose of the file, information or specifications. You are solely responsible for the use of the file, information, or specifications.	This document is the property of Aspen Fasteners Inc. and the information it contains may not be reproduced, disclosed, or shared with any third party without the expressed written permission of Aspen Fasteners Inc.	PRODUCT NAME M5-0.8 X 40mm ISO 7380-1, Metric, Button Head Hex Socket Cap Screws, Full Thread, A2 Stainless Steel	UNIT MILLIMETERS ISSUED 2025-09-05
		SCALE 3.307	PART NUMBER: ME125-508X40	SHEET 1 of 1