Specifications for: M6-1.0 X 22mm DIN 84 / ISO 1207, Metric, Machine Screws, Cheese Head Slot Drive, Full Thread, A2 Stainless Steel

Notes:

- Category: Machine Screws
- System of Measurement: Metric
- Head Style: Cheese Head
- Drive Style: Slotted Drive
- Thread Length: Full Thread
- Thread Direction: Right-Hand Thread
- Material: Stainless Steel
- Material Grade: A2 Stainless Steel
- Coating: Uncoated
- Origin: Origin Undefined
- Standards and Specifications: DIN 84 / ISO 1207

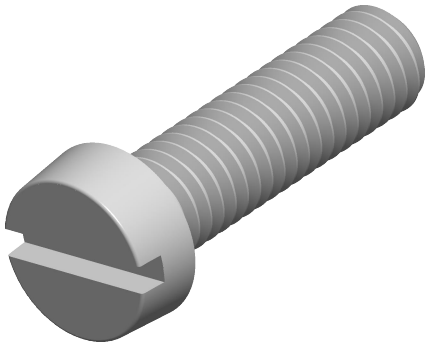

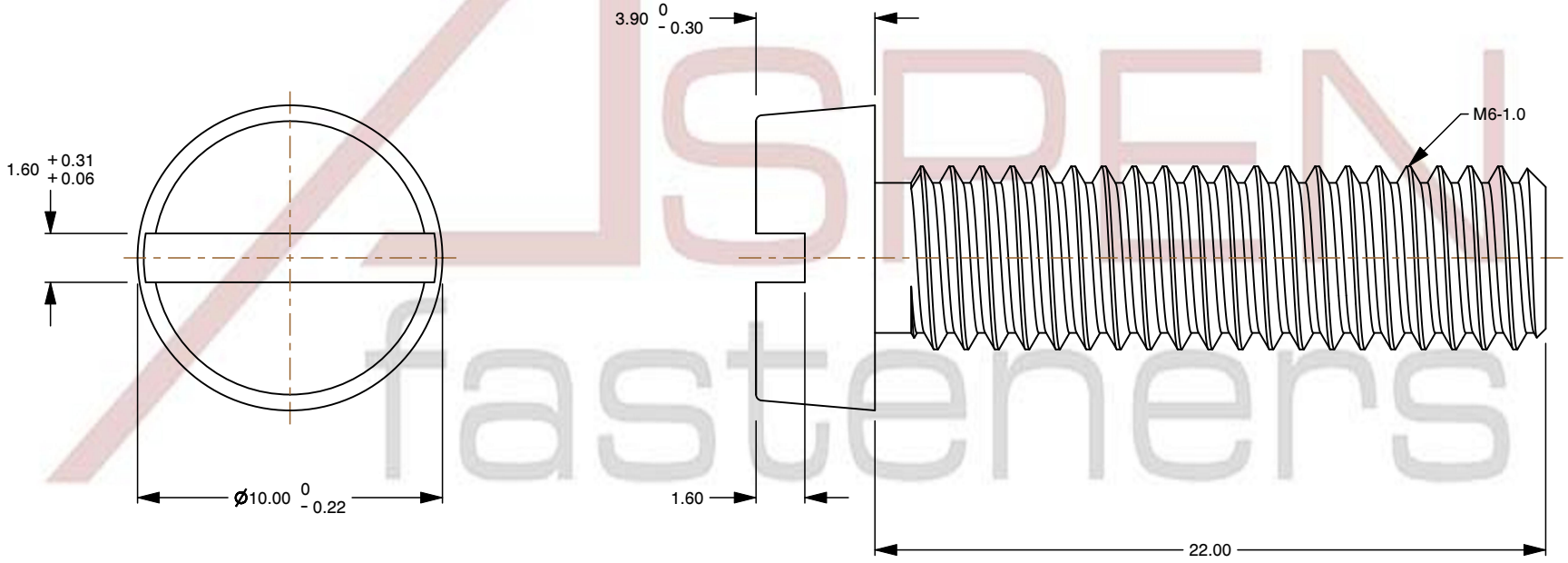

ASPEN fasteners www.aspenfasteners.com	This file and any associated information and specifications are provided for reference and evaluation purposes only and is subject to change without notice. Aspen Fasteners Inc. makes no representations, warranties, or guarantees as to the appropriateness, accuracy, completeness, or suitability for any purpose of the file, information or specifications. You are solely responsible for the use of the file, information, or specifications.	This document is the property of Aspen Fasteners Inc. and the information it contains may not be reproduced, disclosed, or shared with any third party without the expressed written permission of Aspen Fasteners Inc.	PRODUCT NAME M6-1.0 X 22mm DIN 84 / ISO 1207, Metric, Machine Screws, Cheese Head Slot Drive, Full Thread, A2 Stainless Steel	UNIT MILLIMETERS
				ISSUED 2026-08-20
		SCALE 4.445	PART NUMBER: ME136-610X22	SHEET 1 of 1