Specifications for: M3-0.5 X 6mm Machine Screws, Metric, Button Head Tamper-Resistant 6Lobe Torx(r) Pin Drive, A2 Stainless Steel

Notes:

- Category: Machine Screws
- System of Measurement: Metric
- Head Style: Button Head
- Drive Style: Tamper-Resistant 6Lobe Pin Drive
- Drive Detail: Torx(r) Generic Alternative
- Thread Length: Full Thread
- Thread Direction: Right-Hand Thread
- Material: Stainless Steel
- Material Grade: A2 Stainless Steel
- Coating: Uncoated
- Origin: Origin Undefined
- Standards and Specifications: Art. 9121

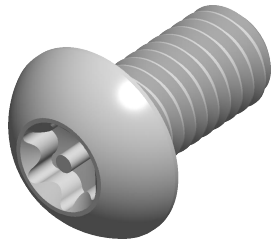

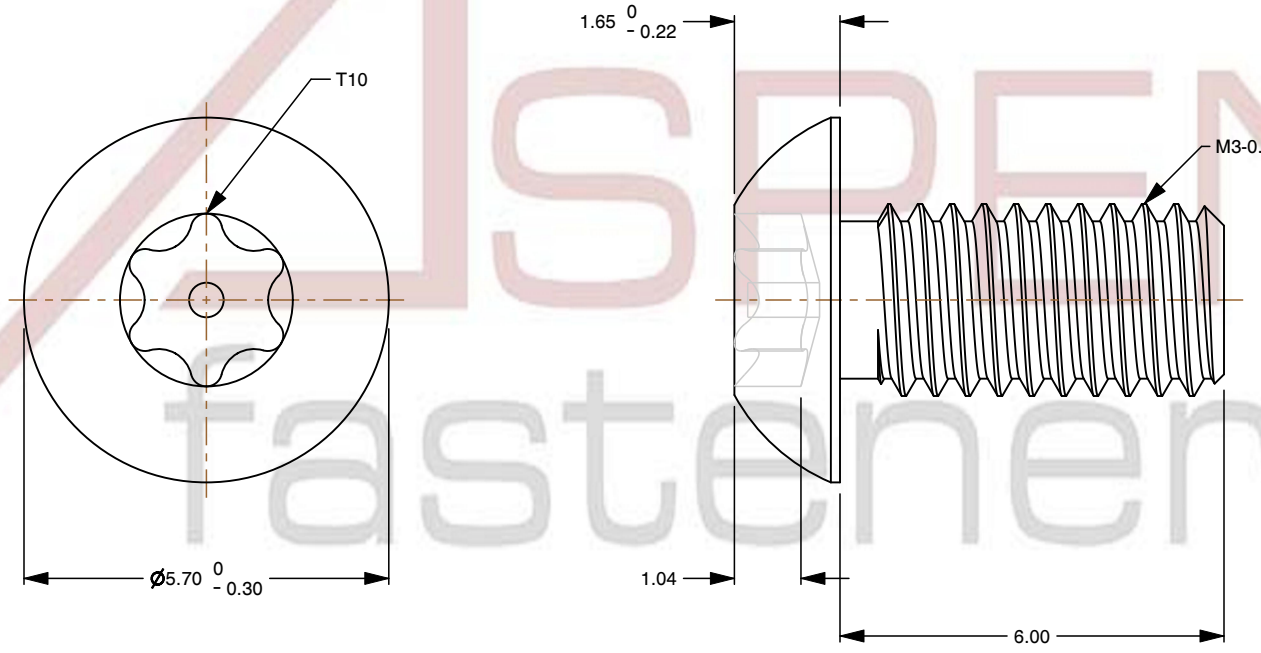

ASPEN fasteners
www.aspenfasteners.com

This file and any associated information and specifications are provided for reference and evaluation purposes only and is subject to change without notice. Aspen Fasteners Inc. makes no representations, warranties, or guarantees as to the appropriateness, accuracy, completeness, or suitability for any purpose of the file, information or specifications. You are solely responsible for the use of the file, information, or specifications.

This document is the property of Aspen Fasteners Inc. and the information it contains may not be reproduced, disclosed, or shared with any third party without the expressed written permission of Aspen Fasteners Inc.

SCALE 8.467

PRODUCT NAME
M3-0.5 X 6mm Machine Screws, Metric, Button Head Tamper-Resistant 6Lobe Torx(r) Pin Drive, A2 Stainless Steel

PART NUMBER: TR077-305X6

UNIT
MILLIMETERS

ISSUED
2026-08-20

SHEET 1 of 1