Specifications for: M3-0.5 X 8mm DIN 7991 / ISO 10642, Metric, Flat Head Socket Cap Screws, Unbrako, Alloy Steel, Zinc

Notes:

- Category: Socket Head Cap Screws
- System of Measurement: Metric
- Head Style: Flat Countersunk Head
- Head Style Detail: 90 Degree Countersink
- Drive Style: Hex Socket Drive
- Thread Length: Full Thread
- Thread Direction: Right-Hand Thread
- Material: Steel
- Material Grade: Alloy Steel
- Coating: Zinc Plated
- Coating Color: Clear
- Origin: Origin Undefined
- Standards and Specifications: DIN 7991 / ISO 10642

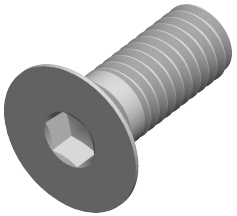

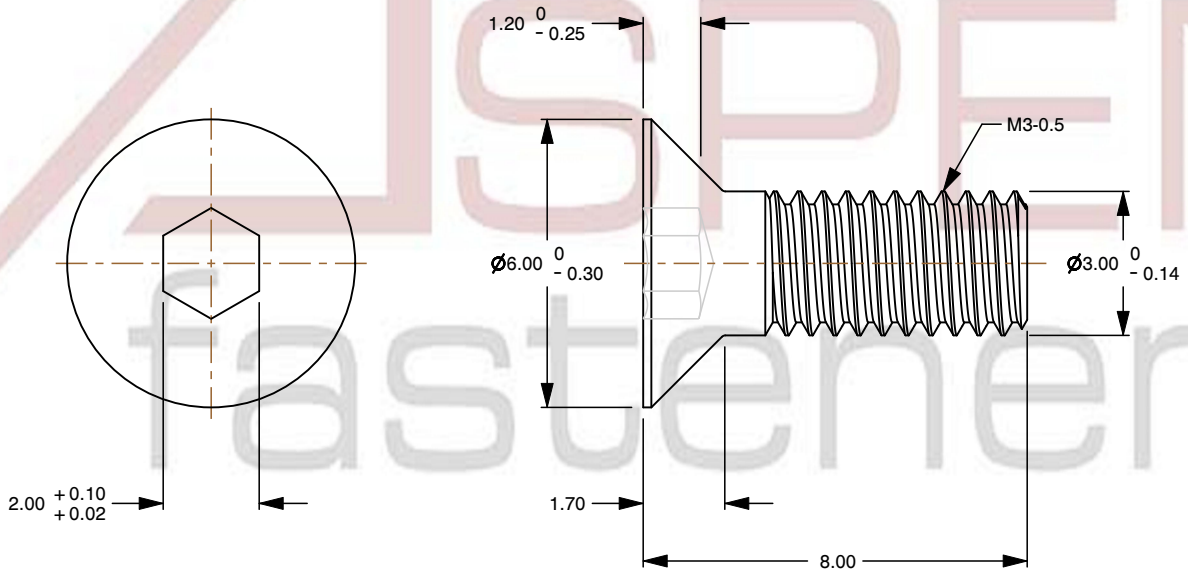

ASPEN fasteners
www.aspenfasteners.com

This file and any associated information and specifications are provided for reference and evaluation purposes only and is subject to change without notice. Aspen Fasteners Inc. makes no representations, warranties, or guarantees as to the appropriateness, accuracy, completeness, or suitability for any purpose of the file, information or specifications. You are solely responsible for the use of the file, information, or specifications.

This document is the property of Aspen Fasteners Inc. and the information it contains may not be reproduced, disclosed, or shared with any third party without the expressed written permission of Aspen Fasteners Inc.

SCALE 6.350

PRODUCT NAME
M3-0.5 X 8mm DIN 7991 / ISO 10642, Metric, Flat Head Socket Cap Screws, Unbrako, Alloy Steel, Zinc

PART NUMBER: UB009-305X8

UNIT
MILLIMETERS

ISSUED
2026-09-19

SHEET 1 of 1