Specifications for: 3/8"-24 X 1-1/2" Hex Head Cap Screws Bolts, UNF Fine Thread, Stainless Steel, MS35308 Rev E, DFARS

Notes:

- Category: Cap Screws
- Head Style: Hex Head
- System of Measurement: Inch
- Head Style Detail: Washer Face
- Drive Style: External Hex Drive
- Pitch: Fine Thread
- Thread Direction: Right-Hand Thread
- Point: Chamfered Point
- Material: Stainless Steel
- Material Grade: 18-8 Stainless Steel
- Material Processes: Passivated
- Coating: Uncoated
- Origin: Made in U.S.A.
- Standards and Specifications: MS35308 Rev E, DFARS

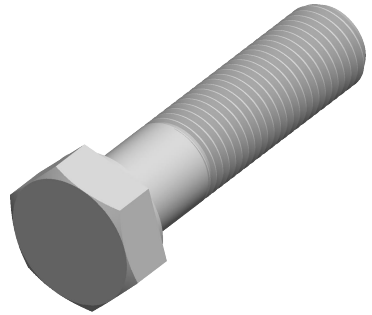

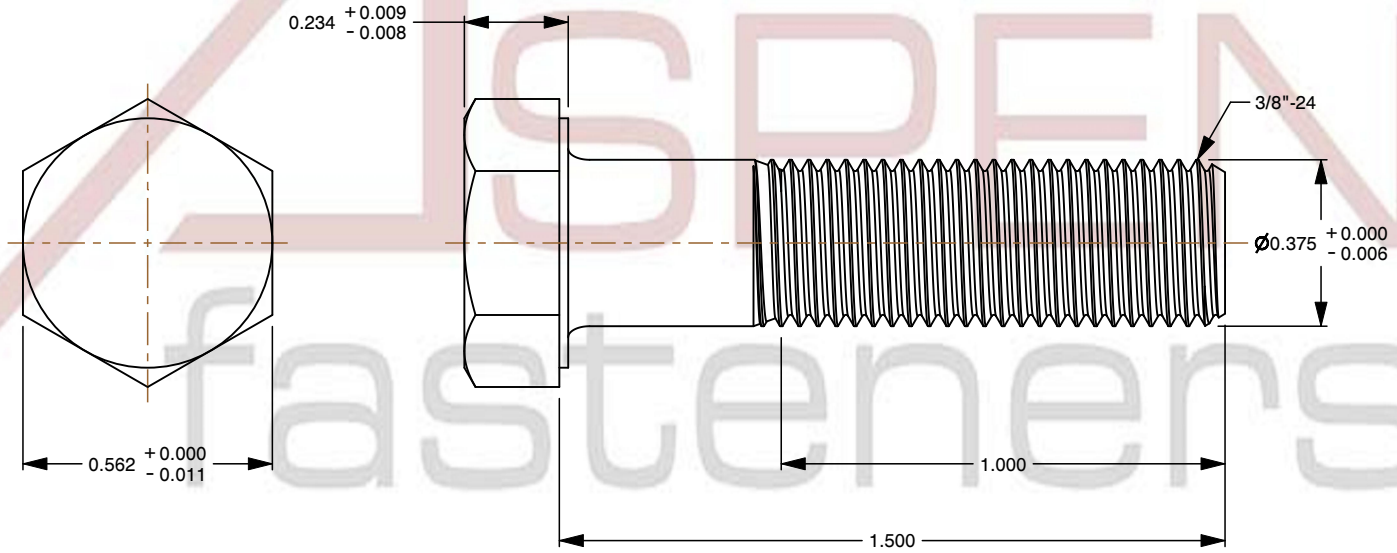

ASPEN fasteners www.aspenfasteners.com	This file and any associated information and specifications are provided for reference and evaluation purposes only and is subject to change without notice. Aspen Fasteners Inc. makes no representations, warranties, or guarantees as to the appropriateness, accuracy, completeness, or suitability for any purpose of the file, information or specifications. You are solely responsible for the use of the file, information, or specifications.	This document is the property of Aspen Fasteners Inc. and the information it contains may not be reproduced, disclosed, or shared with any third party without the expressed written permission of Aspen Fasteners Inc.	PRODUCT NAME 3/8"-24 X 1-1/2" Hex Head Cap Screws Bolts, UNF Fine Thread, Stainless Steel, MS35308 Rev E, DFARS	UNIT INCHES
				ISSUED 2025-01-26
		SCALE 2.311	PART NUMBER: MI005-3824X112	SHEET 1 of 1