Specifications for: M2.5-0.45 X 3mm DIN 963 / ISO 2009, Metric, Machine Screws, Flat Head Slot Drive, Full Thread, A2 Stainless Steel

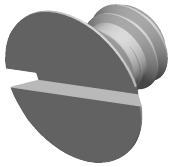

Notes:

- Category: Machine Screws
- Head Style: Flat Countersunk Head
- System of Measurement: Metric
- Head Style Detail: 90 Degree Countersink
- Drive Style: Slotted Drive
- Thread Length: Full Thread
- Thread Direction: Right-Hand Thread
- Material: Stainless Steel
- Material Grade: A2 Stainless Steel
- Coating: Uncoated
- Standards and Specifications: DIN 963 / ISO 2009

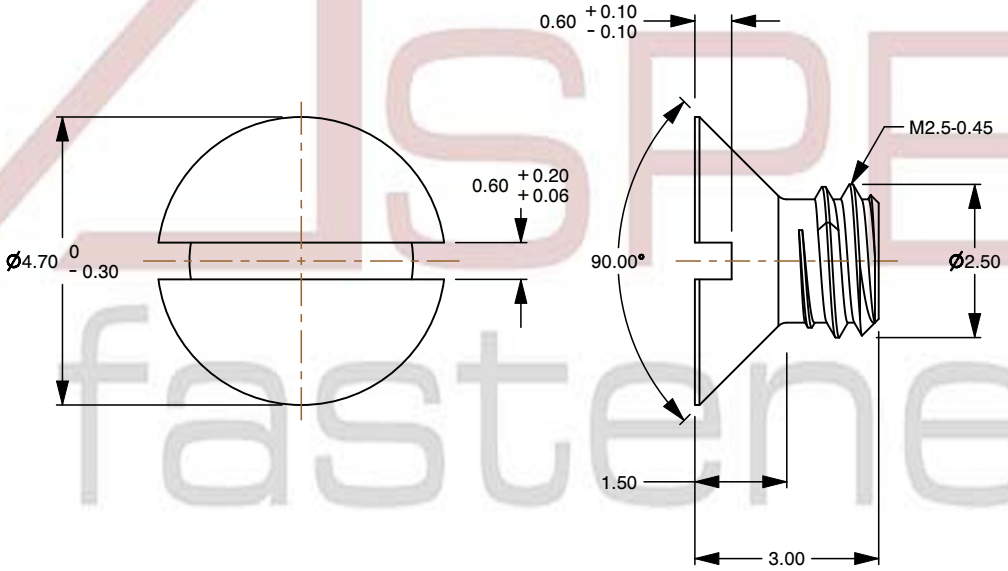

ASPEN fasteners www.aspenfasteners.com	This file and any associated information and specifications are provided for reference and evaluation purposes only and is subject to change without notice. Aspen Fasteners Inc. makes no representations, warranties, or guarantees as to the appropriateness, accuracy, completeness, or suitability for any purpose of the file, information or specifications. You are solely responsible for the use of the file, information, or specifications.	This document is the property of Aspen Fasteners Inc. and the information it contains may not be reproduced, disclosed, or shared with any third party without the expressed written permission of Aspen Fasteners Inc.	PRODUCT NAME M2.5-0.45 X 3mm DIN 963 / ISO 2009, Metric, Machine Screws, Flat Head Slot Drive, Full Thread, A2 Stainless Steel	UNIT MILLIMETERS ISSUED 2025-01-26
		SCALE 8.106	PART NUMBER: ME195-25045X3	SHEET 1 of 1