Specifications for: M5-0.8 X 14mm DIN 966 / ISO 7047, Metric, Machine Screws, Oval Phillips Drive, Full Thread, A2 Stainless Steel

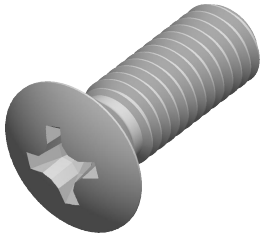

Notes:

- Category: Machine Screws
- Head Style: Oval Countersunk Head
- System of Measurement: Metric
- Head Style Detail: 90 Degree Countersink
- Drive Style: Cruciform Recess Drive
- Drive Detail: Phillips Type H
- Thread Length: Full Thread
- Thread Direction: Right-Hand Thread
- Material: Stainless Steel
- Material Grade: A2 Stainless Steel
- Coating: Uncoated
- Standards and Specifications: DIN 966 / ISO 7047

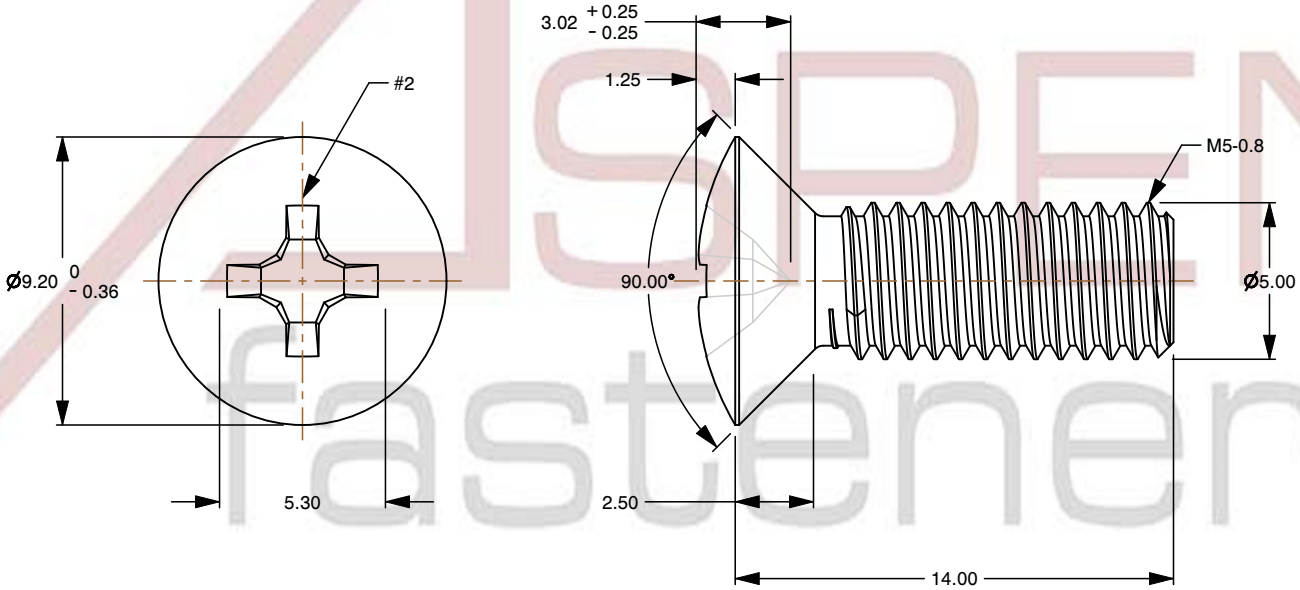

ASPEN fasteners www.aspenfasteners.com	This file and any associated information and specifications are provided for reference and evaluation purposes only and is subject to change without notice. Aspen Fasteners Inc. makes no representations, warranties, or guarantees as to the appropriateness, accuracy, completeness, or suitability for any purpose of the file, information or specifications. You are solely responsible for the use of the file, information, or specifications.	This document is the property of Aspen Fasteners Inc. and the information it contains may not be reproduced, disclosed, or shared with any third party without the expressed written permission of Aspen Fasteners Inc.	PRODUCT NAME M5-0.8 X 14mm DIN 966 / ISO 7047, Metric, Machine Screws, Oval Phillips Drive, Full Thread, A2 Stainless Steel	UNIT MILLIMETERS ISSUED 2025-02-20
		SCALE 4.141	PART NUMBER: ME205-508X14	SHEET 1 of 1