Specifications for: M20-2.5 X 30mm DIN 915 / ISO 4028, Metric, Hex Socket Set Screws, Dog Point, A2 Stainless Steel

Notes:

- Category: Set Screws
- System of Measurement: Metric
- Head Style: Headless
- Drive Style: Hex Socket Drive
- Thread Length: Full Thread
- Thread Direction: Right-Hand Thread
- Point: Dog Point
- Material: Stainless Steel
- Material Grade: A2 Stainless Steel
- Coating: Uncoated
- Origin: Origin Undefined
- Standards and Specifications: DIN 915 / ISO 4028

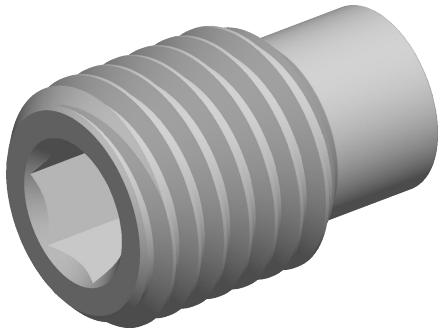

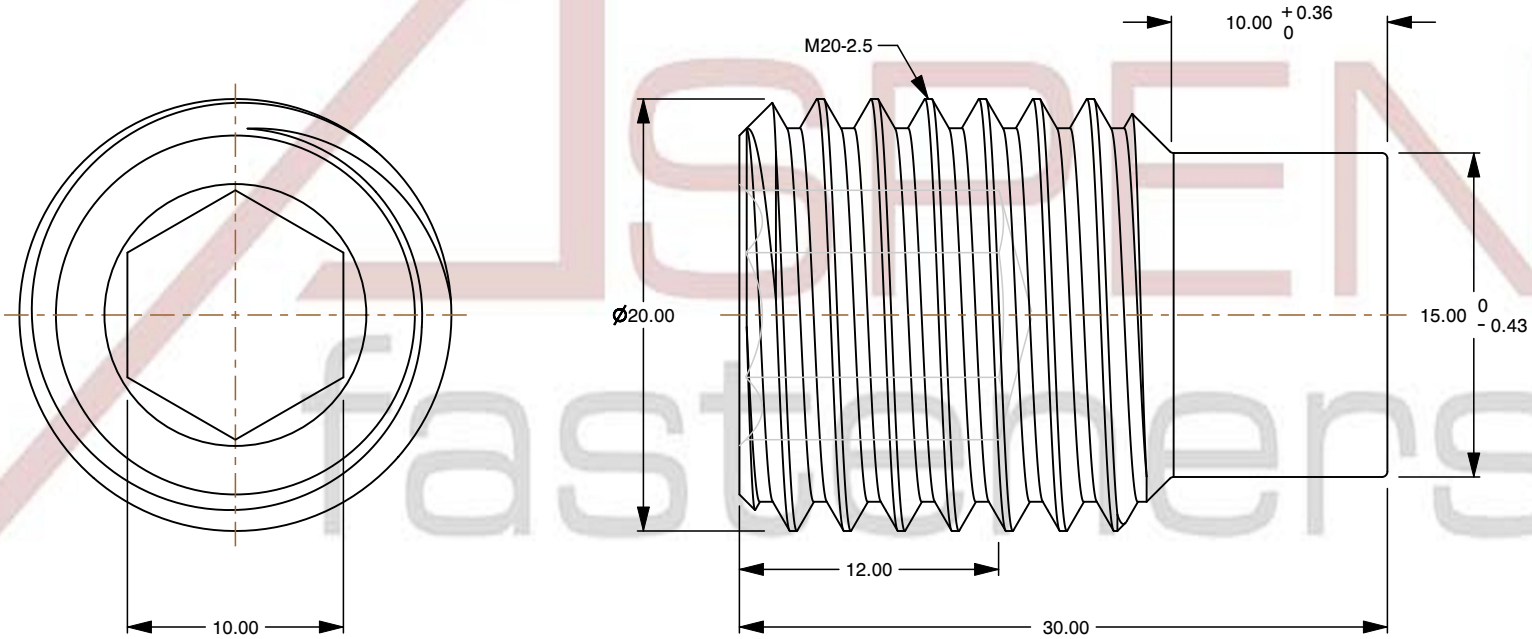

ASPEN fasteners www.aspenfasteners.com	This file and any associated information and specifications are provided for reference and evaluation purposes only and is subject to change without notice. Aspen Fasteners Inc. makes no representations, warranties, or guarantees as to the appropriateness, accuracy, completeness, or suitability for any purpose of the file, information or specifications. You are solely responsible for the use of the file, information, or specifications.	This document is the property of Aspen Fasteners Inc. and the information it contains may not be reproduced, disclosed, or shared with any third party without the expressed written permission of Aspen Fasteners Inc.	PRODUCT NAME M20-2.5 X 30mm DIN 915 / ISO 4028, Metric, Hex Socket Set Screws, Dog Point, A2 Stainless Steel	UNIT MILLIMETERS ISSUED 2025-01-09
		SCALE 2.858	PART NUMBER: ME270-2025X30	SHEET 1 of 1