Specifications for: M12-1.75 X 100mm Machine Screws, Metric, Flat Countersunk Head Tamper-Resistant 6Lobe Torx(r) Pin Drive, A2 Stainless Steel

Notes:

- Category: Machine Screws
- System of Measurement: Metric
- Head Style: Flat Countersunk Head
- Drive Style: Tamper-Resistant 6Lobe Pin Drive
- Drive Detail: Torx(r) Generic Alternative
- Thread Length: Full Thread
- Thread Direction: Right-Hand Thread
- Material: Stainless Steel
- Material Grade: A2 Stainless Steel
- Coating: Uncoated
- Origin: Origin Undefined
- Standards and Specifications: Art. 9123

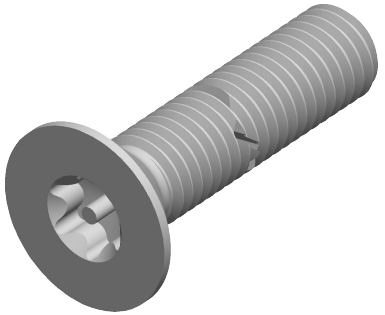

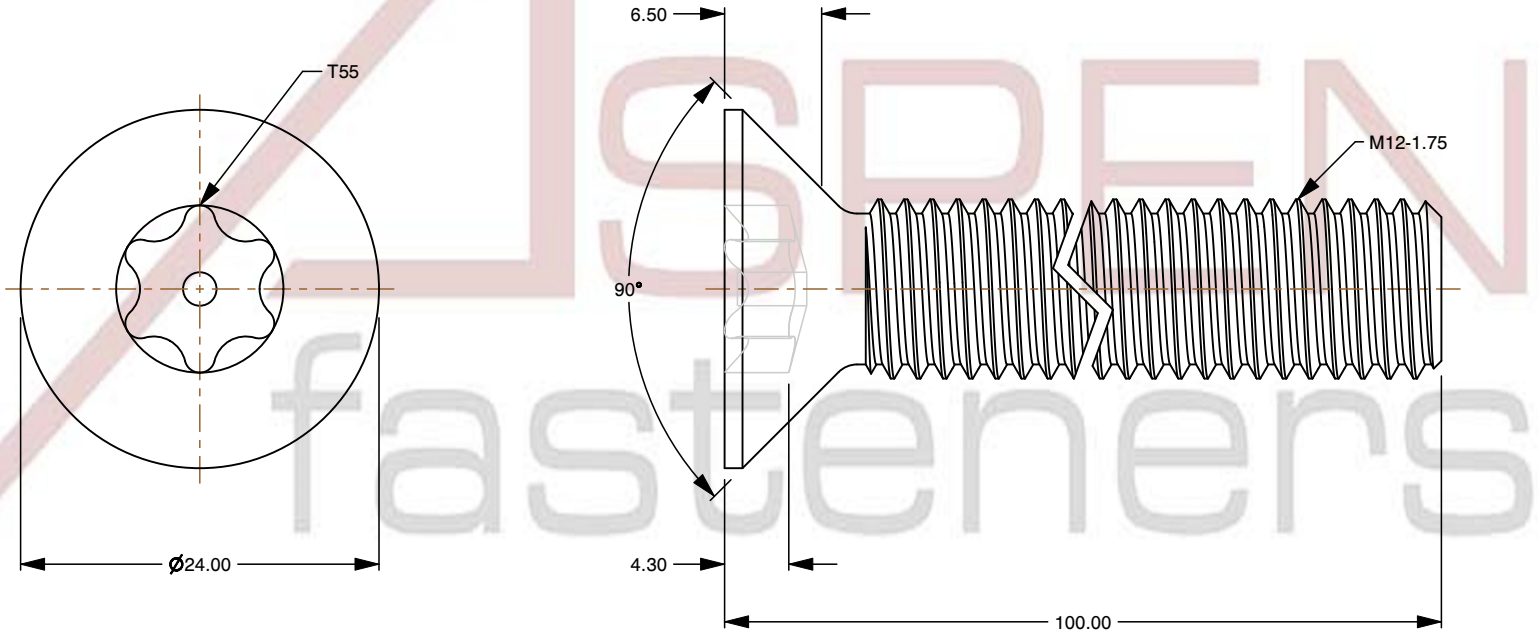

ASPEN fasteners

ASPEN fasteners www.aspenfasteners.com	This file and any associated information and specifications are provided for reference and evaluation purposes only and is subject to change without notice. Aspen Fasteners Inc. makes no representations, warranties, or guarantees as to the appropriateness, accuracy, completeness, or suitability for any purpose of the file, information or specifications. You are solely responsible for the use of the file, information, or specifications.	This document is the property of Aspen Fasteners Inc. and the information it contains may not be reproduced, disclosed, or shared with any third party without the expressed written permission of Aspen Fasteners Inc.	PRODUCT NAME M12-1.75 X 100mm Machine Screws, Metric, Flat Countersunk Head Tamper-Resistant 6Lobe Torx(r) Pin Drive, A2 Stainless Steel	UNIT MILLIMETERS
				ISSUED 2026-08-20
		SCALE 1.976	PART NUMBER: TR079-12175X100	SHEET 1 of 1