Specifications for: M2-0.4 X 8mm ISO 7380-2, Metric, Flanged Button Head Cap Screws, 6Lobe Torx(r) Drive, Full Thread, A2 Stainless Steel

Notes:

- Category: Socket Head Cap Screws
- System of Measurement: Metric
- Head Style: Button Head with Flange
- Drive Style: 6Lobe Drive
- Drive Detail: Torx(r) Generic Alternative
- Thread Length: Full Thread
- Thread Direction: Right-Hand Thread
- Material: Stainless Steel
- Material Grade: A2 Stainless Steel
- Coating: Uncoated
- Origin: Origin Undefined
- Standards and Specifications: ISO 7380-2

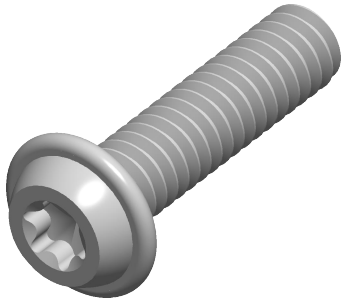

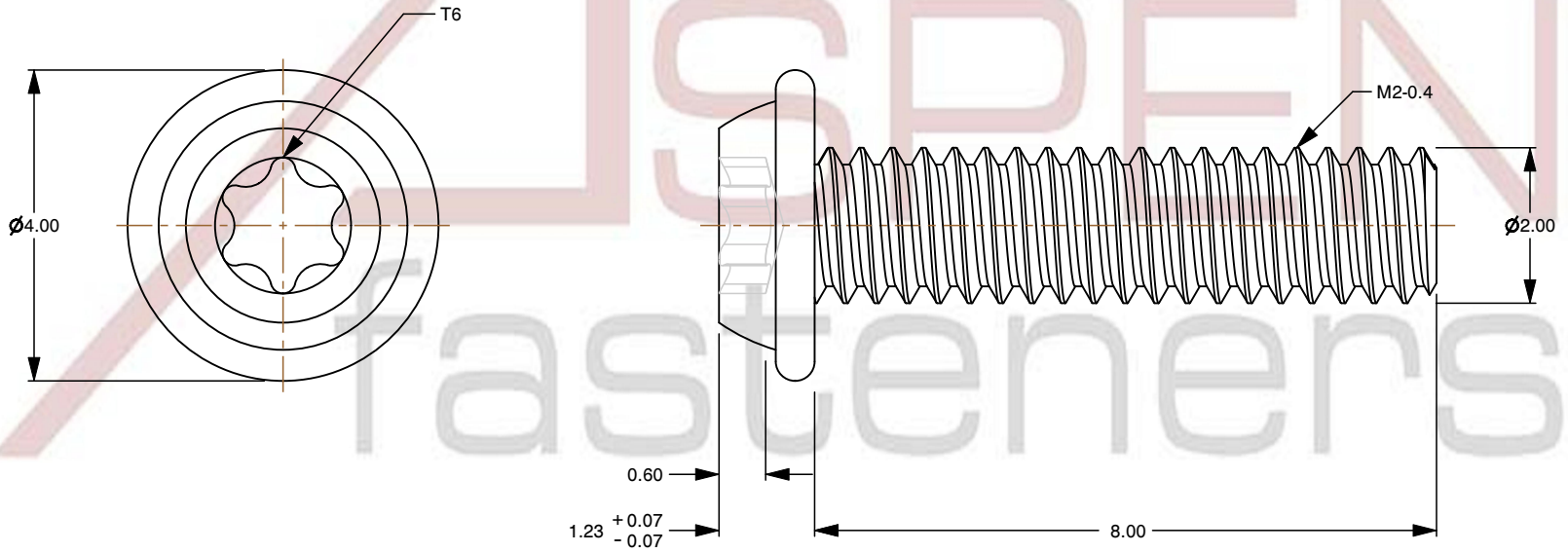

ASPEN fasteners

ASPEN fasteners www.aspenfasteners.com	This file and any associated information and specifications are provided for reference and evaluation purposes only and is subject to change without notice. Aspen Fasteners Inc. makes no representations, warranties, or guarantees as to the appropriateness, accuracy, completeness, or suitability for any purpose of the file, information or specifications. You are solely responsible for the use of the file, information, or specifications.	This document is the property of Aspen Fasteners Inc. and the information it contains may not be reproduced, disclosed, or shared with any third party without the expressed written permission of Aspen Fasteners Inc.	PRODUCT NAME M2-0.4 X 8mm ISO 7380-2, Metric, Flanged Button Head Cap Screws, 6Lobe Torx(r) Drive, Full Thread, A2 Stainless Steel	UNIT MILLIMETERS
				ISSUED 2025-09-05
		SCALE 10.559	PART NUMBER: ME483-204X8	SHEET 1 of 1