Specifications for: M10-1.5 X 14mm DIN 7984, Metric, Low Head Hex Socket Cap Screws, A4 Stainless Steel

Notes:

- Category: Socket Head Cap Screws
- System of Measurement: Metric
- Head Style: Low Cylindrical Head
- Drive Style: Hex Socket Drive
- Thread Direction: Right-Hand Thread
- Material: Stainless Steel
- Material Grade: A4 Stainless Steel
- Coating: Uncoated
- Origin: Origin Undefined
- Standards and Specifications: DIN 7984

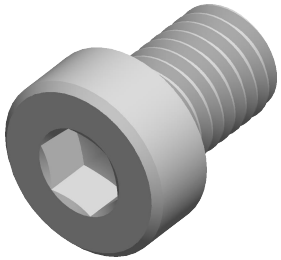

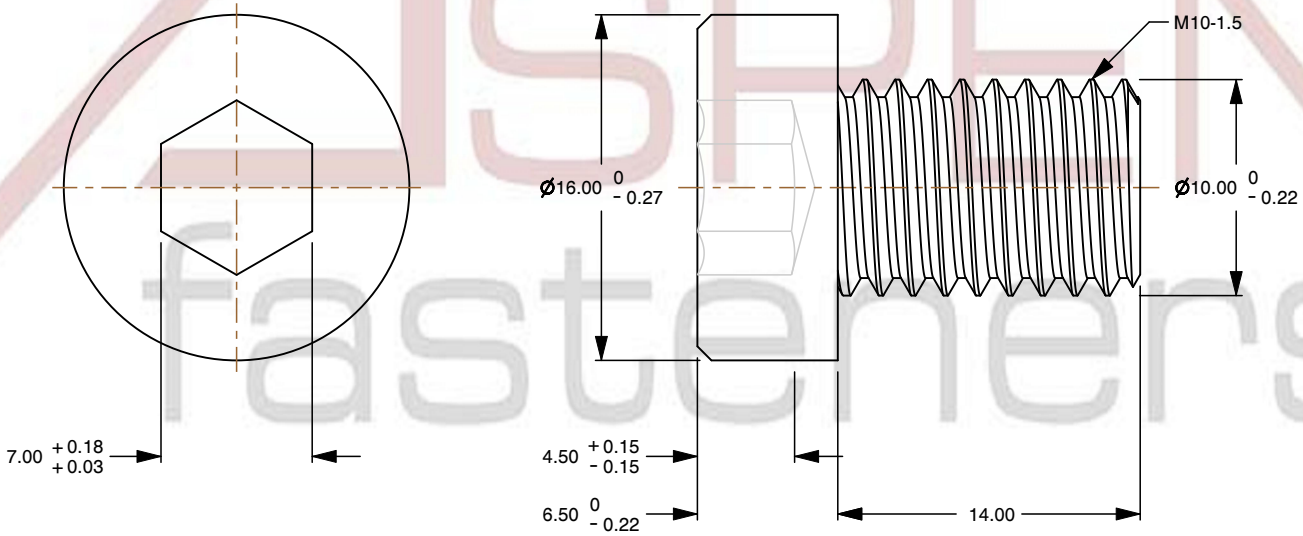

ASPEN fasteners www.aspenfasteners.com	This file and any associated information and specifications are provided for reference and evaluation purposes only and is subject to change without notice. Aspen Fasteners Inc. makes no representations, warranties, or guarantees as to the appropriateness, accuracy, completeness, or suitability for any purpose of the file, information or specifications. You are solely responsible for the use of the file, information, or specifications.	This document is the property of Aspen Fasteners Inc. and the information it contains may not be reproduced, disclosed, or shared with any third party without the expressed written permission of Aspen Fasteners Inc.	PRODUCT NAME M10-1.5 X 14mm DIN 7984, Metric, Low Head Hex Socket Cap Screws, A4 Stainless Steel	UNIT MILLIMETERS ISSUED 2025-09-05
		SCALE 2.858	PART NUMBER: ME493-1015X14	SHEET 1 of 1